DRC
PZ25-12000043
01/21/2026

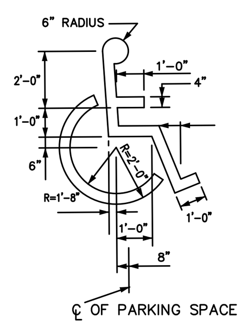

ACCESSIBLE SYMBOL

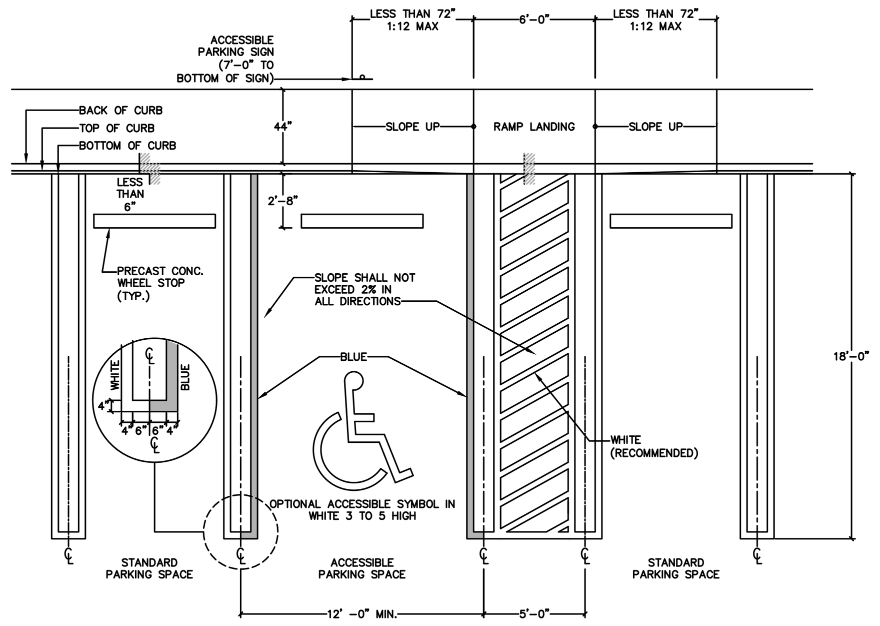

ACCESSIBLE PARKING DETAIL

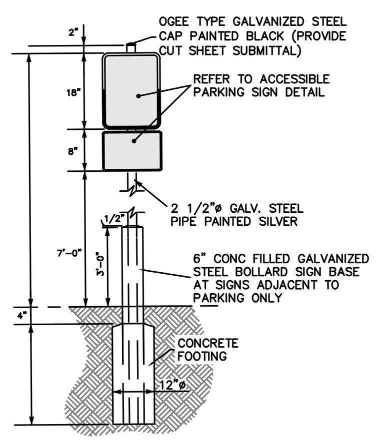

ACCESSIBLE PARKING SIGN INSTALLATION DETAIL

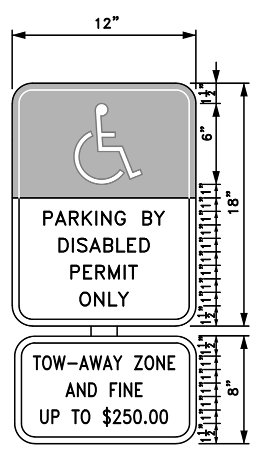

FTP-20-06

2" RADII 3/8" BORDER
1" SERIES C LEGEND

COLOR	TOP	BOTTOM
BACKGROUND	BLUE	WHITE
LEGEND AND BORDER	WHITE	BLACK

1" RADII 3/8" BORDER
1" SERIES C LEGEND

COLOR	
BACKGROUND	WHITE
LEGEND AND BORDER	BLACK

ACCESSIBLE PARKING SIGN

ACCESSIBLE PARKING SPACE DETAIL

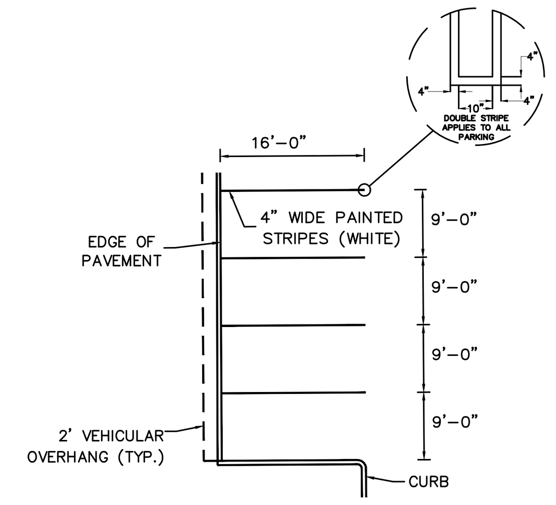

STANDARD PARKING SPACE STRIPING (NTS)

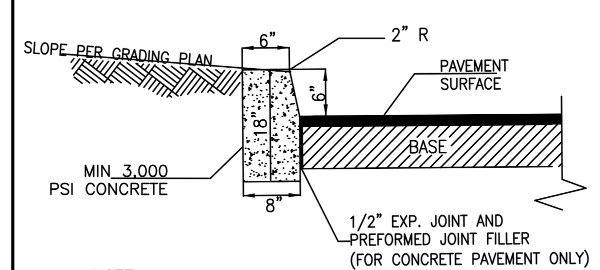

NOTE:
1. PROVIDE 1/8" – 1/4" CONTRACTION JOINTS AT 10 FEET ON-CENTER

FDOT TYPE D CURB

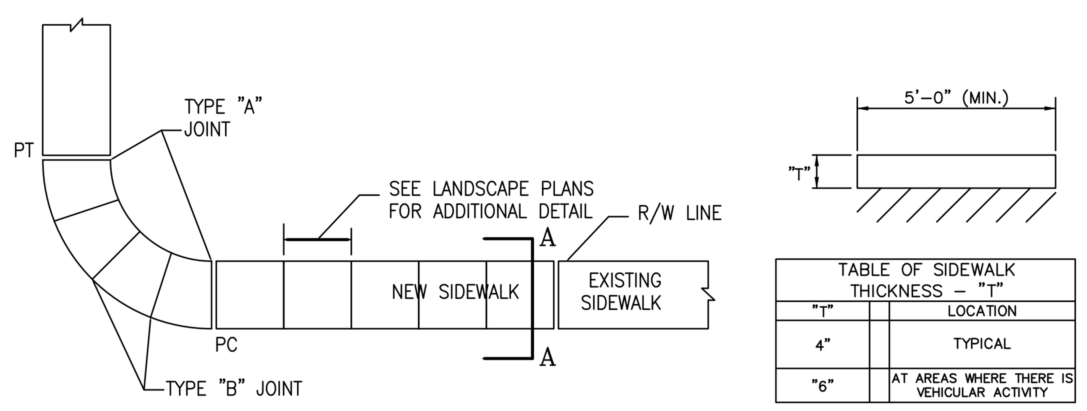

TABLE OF SIDEWALK THICKNESS – "T"		
"T"		LOCATION
4"		TYPICAL
"6"		AT AREAS WHERE THERE IS VEHICULAR ACTIVITY

TABLE OF SIDEWALK JOINTS		
TYPE		LOCATION
"A"		P.C. P.T. OF CURVES & WHERE SIDEWALK ABUTS CONCRETE DRIVEWAY.
"B"		5'-0" CENTER TO CENTER ON SIDEWALKS.
"C"		WHERE SIDEWALK ABUTS CONCRETE CURBS, DRIVEWAYS, AND SIMILAR STRUCTURES.

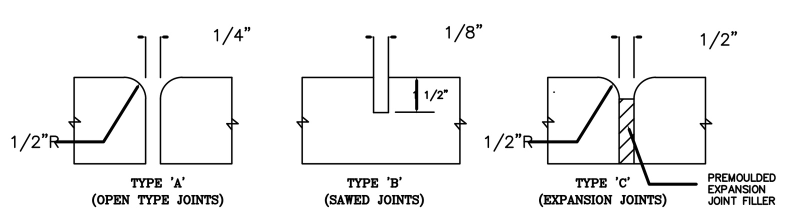

STANDARD CONCRETE SIDEWALK

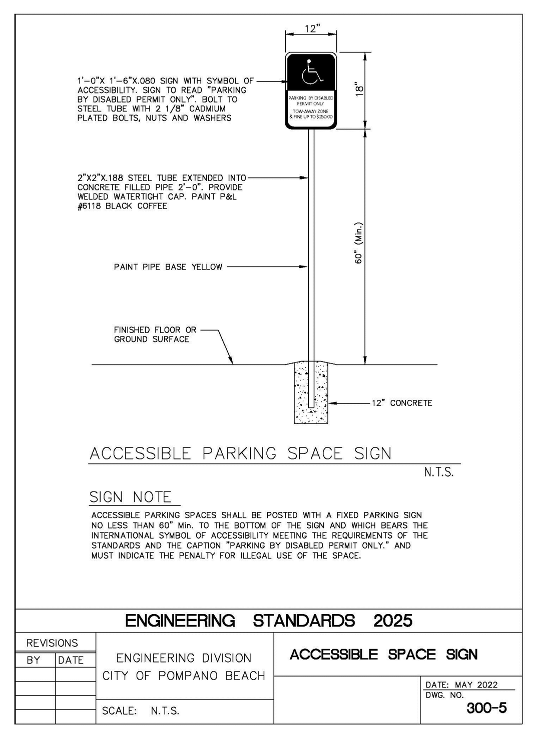

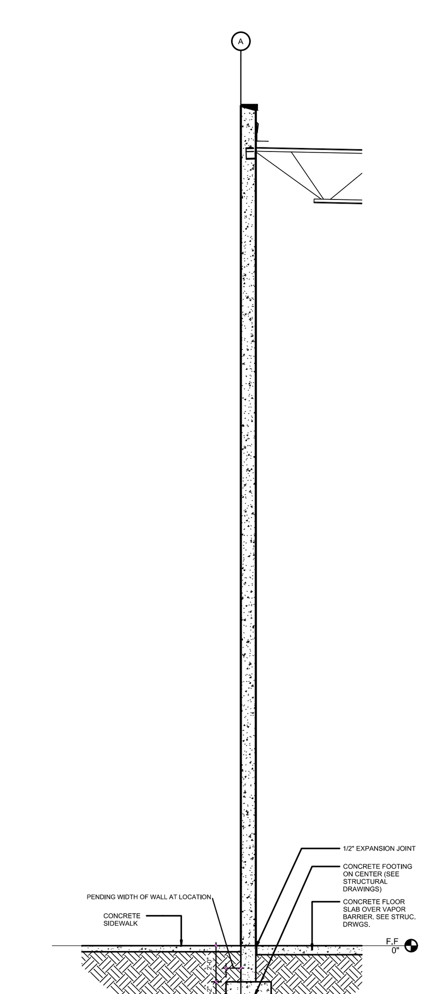

TYPICAL FOOTING SECTION DIAGRAM

12/11/25, 9:16 AM 314-1-Typical-Roadway-Section.jpg (1700×2200)

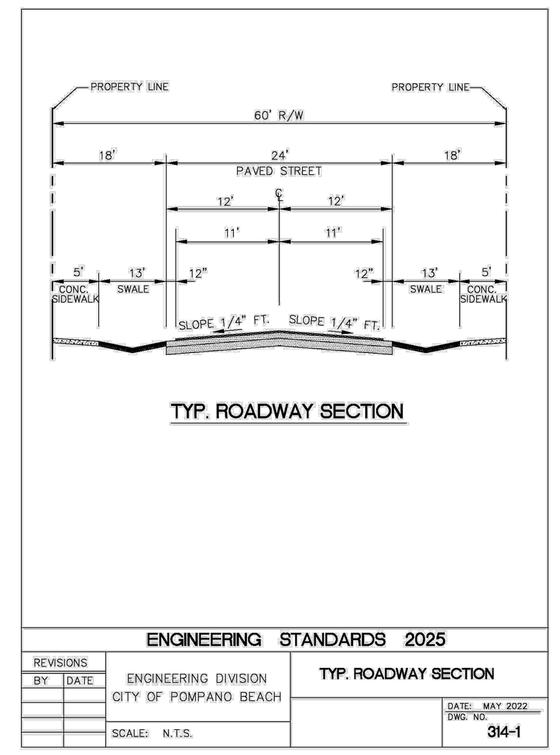

https://cdn.pompanobeachfl.gov/city/pages/engineering/misc-standard/314-1-Typical-Roadway-Section.jpg 1/1

12/11/25, 9:16 AM 315-1-Typical-Screen-For-Utilities.jpg (1700×2200)

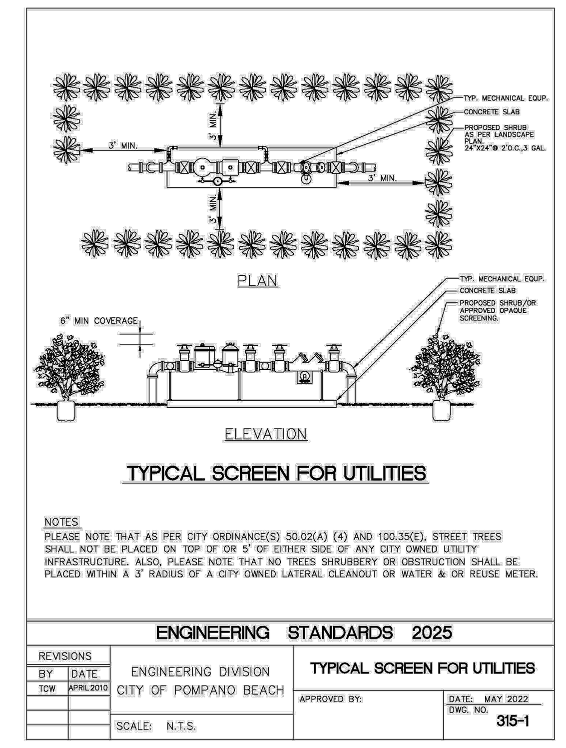

https://cdn.pompanobeachfl.gov/city/pages/engineering/misc-standard/315-1-Typical-Screen-For-Utilities.jpg 1/1

12/11/25, 9:16 AM 316-1-Required-Tree-Locations.jpg (1700×2200)

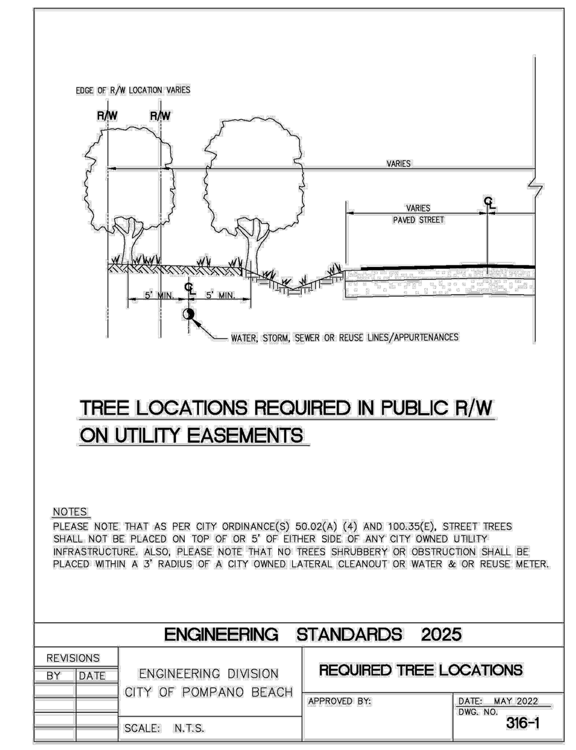

https://cdn.pompanobeachfl.gov/city/pages/engineering/misc-standard/316-1-Required-Tree-Locations.jpg 1/1

12/11/25, 9:17 AM 301-2-Sidewalk-Details.jpg (1700×2200)

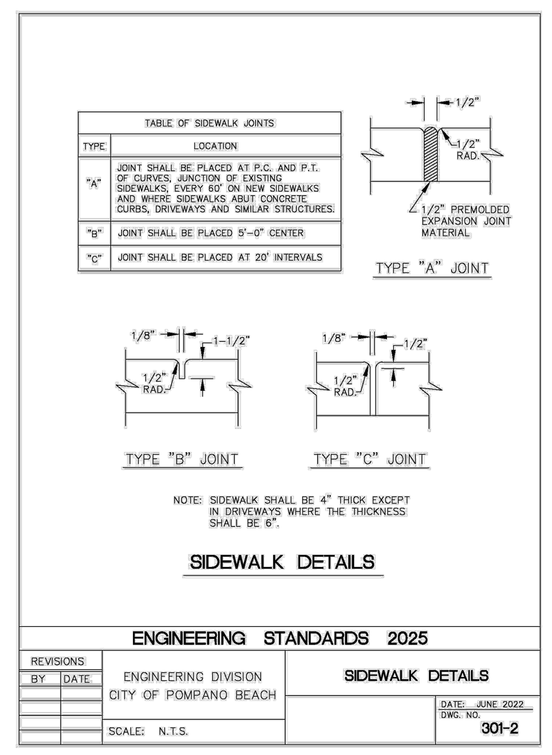

https://cdn.pompanobeachfl.gov/city/pages/engineering/misc-standard/301-2-Sidewalk-Details.jpg 1/1

12/11/25, 9:16 AM 306-2-Road-Surface-Restoration.jpg (1700×2200)

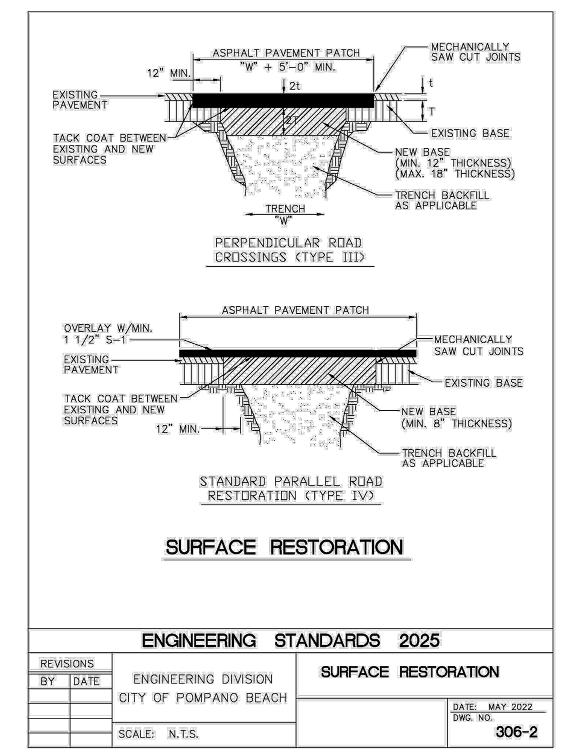

https://cdn.pompanobeachfl.gov/city/pages/engineering/misc-standard/306-2-Road-Surface-Restoration.jpg 1/1

12/11/25, 9:16 AM 306-4-Edge-of-Pavement-Restoration.jpg (1700×2200)

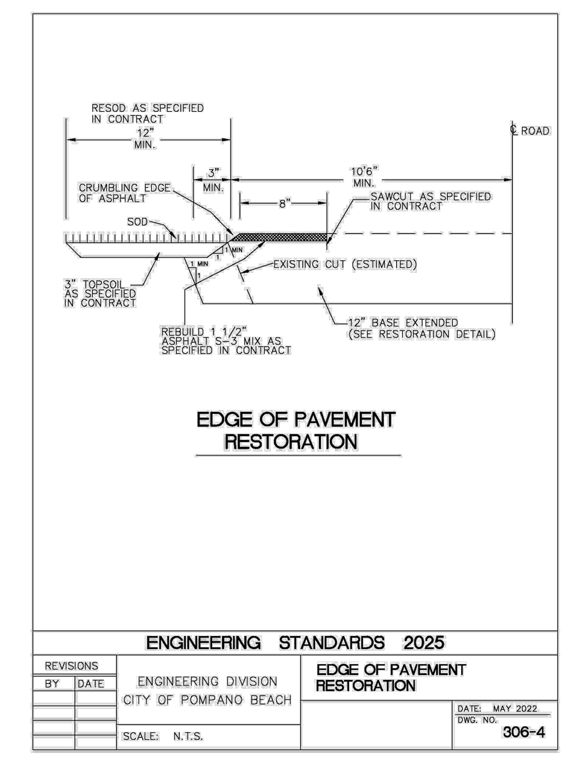

https://cdn.pompanobeachfl.gov/city/pages/engineering/misc-standard/306-4-Edge-of-Pavement-Restoration.jpg 1/1

12/11/25, 9:17 AM 300-1-Concrete-Curb-and-Gutter-Detail-Type-F.jpg (1700×2200)

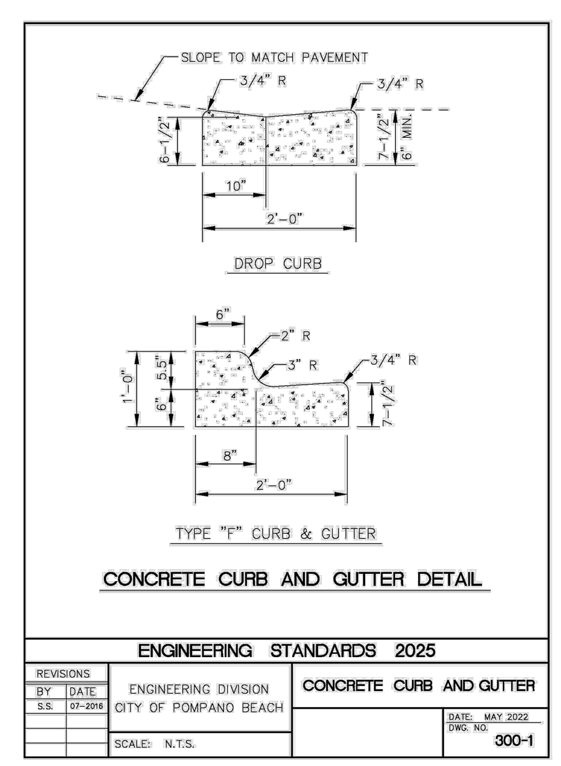

https://cdn.pompanobeachfl.gov/city/pages/engineering/misc-standard/300-1-Concrete-Curb-and-Gutter-Detail-Type-F.jpg 1/1

12/11/25, 9:17 AM 300-2-Concrete-Curb-Detail-Type-D.jpg (1700×2200)

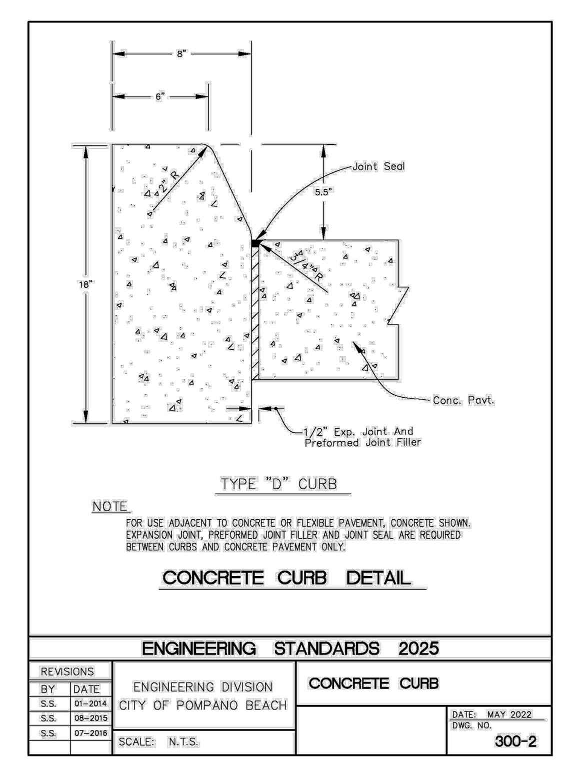

https://cdn.pompanobeachfl.gov/city/pages/engineering/misc-standard/300-2-Concrete-Curb-Detail-Type-D.jpg 1/1

12/11/25, 9:17 AM 301-1-Sidewalk-Details.jpg (1700×2200)

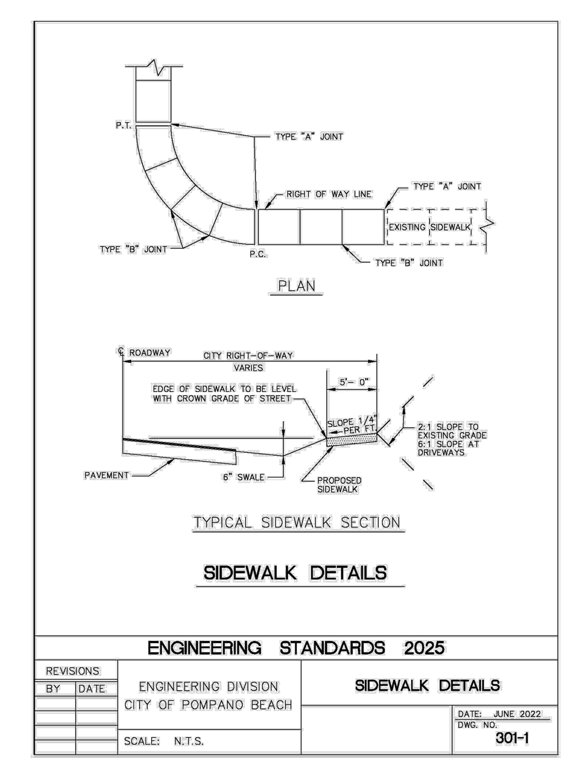

https://cdn.pompanobeachfl.gov/city/pages/engineering/misc-standard/301-1-Sidewalk-Details.jpg 1/1

MICHAEL P. CARR
LICENSE
No. 72424
STATE OF FLORIDA
PROFESSIONAL ENGINEER

This item has been digitally signed and sealed by Michael Carr, PE. on the date adjacent to the seal

Printed Copies of this document are not considered signed and sealed and the signature must be verified on any electronic copies.

Michael Carr
Digitally signed by Michael Carr
Date: 2025.12.18 08:19:39 -05'00'

SIGNATURE DATE SIGNED
MICHAEL CARR
PROFESSIONAL ENGINEER FL Lic. No. 72424

LANGAN
Langan Engineering and Environmental Services, LLC.
110 East Broward Boulevard, Suite 1500
Fort Lauderdale, FL 33301
T: 954.320.2100 F: 954.320.2101 www.langan.com
FBPE REGISTRY NO. 6601/LB8172/LB8198

Project
FESTIVAL SOUTH
NW 33RD ST
POMPANO BEACH
BROWARD COUNTY FLORIDA

Drawing Title
SITE PLAN DETAILS

Date	Description	No.

Revisions

Project No. 330134202
Date DECEMBER 2025
Drawn By DMP
Checked By CL
Drawing No. SP-8.0

LANGAN
Project No. 330134202

© 2025 Langan